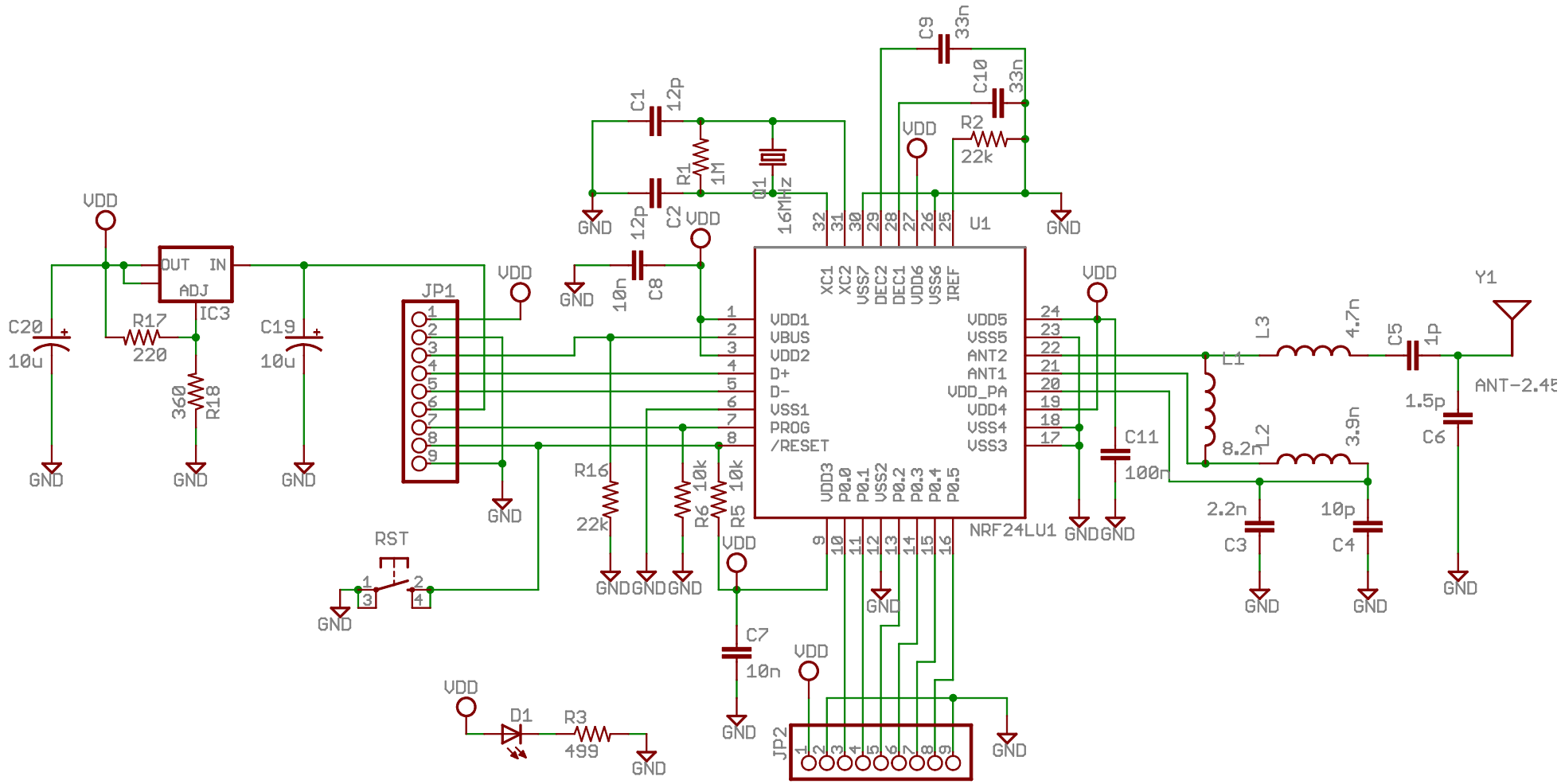
VDD
OUT
IN
ADJ
IC3
C20
10u
R17
220
360
R18
C19
10u
GND
JP1
RST
D1
R3
499
C1
12p
R1
1M
Q1
16MHz
C2
12p
C8
10n
C9
33n
C10
33n
R2
22k
U1
XC1
XC2
VSS7
DEC2
DEC1
VDD6
VSS6
IREF
VDD1
VBUS
VDD2
D+
D-
VSS1
PROG
/RESET
VDD5
VSS5
ANT2
ANT1
VDD_PA
VDD4
VSS4
VSS3
VDD3
P0.0
P0.1
VSS2
P0.2
P0.3
P0.4
P0.5
NRF24LU1
R16
22k
R6
10k
R5
10k
C7
10n
JP2
C11
100n
L1
L2
L3
4.7n
8.2n
3.9n
C5
1p
1.5p
C6
2.2n
C3
10p
C4
Y1
ANT-2.45